TECHLINE®
IMPROVING FLEXIBILITY

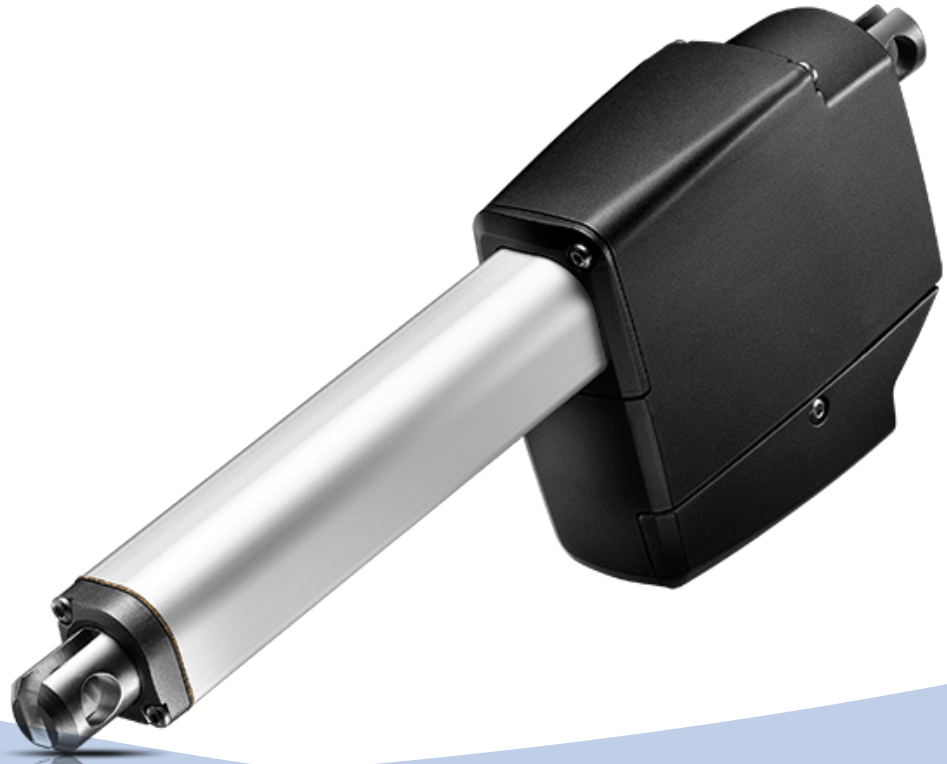

Actuator LA25

Endstop signal output

Connection diagram

LINAK®
WE IMPROVE YOUR LIFE

LINAK.COM/TECHLINE

Connection diagram

25XXXXXXXX000X0X=XXXXX10XXXXXX

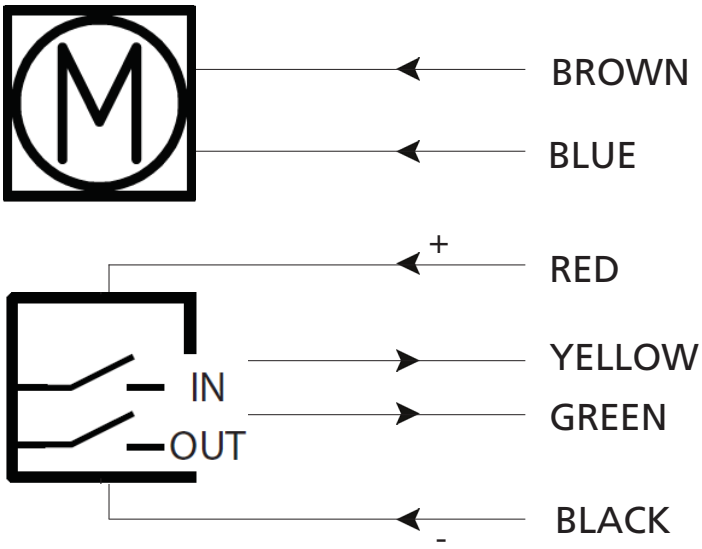

I/O Specifications

Input/Output	Specification	Comments
Description	The actuator can be equipped with electronically controlled endstop signals out. See connection diagram, figure above	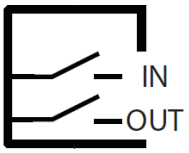
Brown	12-24VDC (+/-) 12V ± 20% 24V ± 10% Under normal conditions: 12V, max. 5A depending on load 24V, max. 2.5A depending on load	To extend actuator: Connect Brown to positive To retract actuator: Connect Brown to negative
Blue		To extend actuator: Connect Blue to negative To retract actuator: Connect Blue to positive
Red	Signal power supply (+) 12-24VDC	Current consumption: Max. 40mA, also when the actuator is not running
Black	Signal power supply GND (-)	
Green	Endstop signal out	Output voltage min. VIN - 2V Source current max. 100mA NOT potential free
Yellow	Endstop signal in	
Violet	Not to be connected	
White	Not to be connected	

Tip: If you wish to use the endstop signals, you will have to keep power on the brown, blue, red and black wires, otherwise the signal will be lost.

FOR MOUNTING INSTRUCTIONS AND GUIDANCE IN USAGE, PLEASE SEE THE RELEVANT USER'S MANUALS